Current Automation
WhatsApp contact

Current Automation
POWER SOLUTION PROVIDERS

WWW.MEANWELL.CO.ZA

Security Power Supplies



MEAN WELL

The Silent Guardian of Your Security System

WHEN EVERY SECOND COUNTS

MEAN WELL POWERS THE SYSTEM



LRS-1200 Series



MEAN WELL

SECURITY - SELECTION GUIDE

Secure your system- reliable protection. Find the right supply today

Product Profile: Basic

Type: Enclosed

Series Name	Watt	Charger	Charging Adj.	UPS	AC OK	DC OK	BAT. Low	No BAT.	Alarm	Com	Design ref. Safety
SCP	35W, 50W, 75W										
AD	55W, 155W	✓									
LAD	120W, 240W, 360W, 600W	✓		✓	✓ (TTL)		✓ (TTL)		✓ (Buzzer optional)	360/600W UART optionl	GB17945

Product Profile: Advance

Type: Open-Frame

Series Name	Watt	Charger	Charging Adj.	UPS	AC OK	DC OK	BAT. Low	No BAT.	Alarm	Com	Design ref. Safety
PSC	35W, 60W, 100W, 160W	✓		✓	✓ (RELAY)		✓ (TTL)				
DRC	40W, 60W, 100W, 180W	✓		✓	✓ (RELAY)		✓ (TTL)				

Product Profile: Premium

Type: DIN-Rail (Quick Attach)

Series Name	Watt	Charger	Charging Adj.	UPS	AC OK	DC OK	BAT. Low	No BAT.	Alarm	Com	Design ref. Safety
DRS	240W, 480W	✓	✓ (20~100%)	✓	✓ (RELAY)	✓ (RELAY)	✓ (RELAY)	✓ (RELAY)	✓ (MODBus)	✓ (MODBus)	UL2524, EN54-4, GB17945

Additional Series: LRS-1200 (Enclosed)

Series Name	Watt	Charger	Charging Adj.	UPS	AC OK	DC OK	BAT. Low	No BAT.	Alarm	Com	Design ref. Safety
LRS-1200	1200W				✓	✓					IEC/EN 62368-1,



MEAN WELL - SCP Series

Covering 35W, 50W and 75W power levels





The SCP Series works especially well in:

- Security and access control systems
- Alarm & intrusion detection systems
- Battery backup & float charging
- Emergency lighting & safety circuits
- CCTV, monitoring & surveillance equipment



MEAN WELL - SCP Series

Covering 35W, 50W and 75W power levels

Model	SCP-35-12	SCP-35-24	SCP-50-12	SCP-50-24	SCP-75-12	SCP-75-24
Nominal Power	35 W	35 W	50 W	50 W	75 W	75 W
Output Voltage	13.8 V	27.6 V	13.8 V	27.6 V	13.8 V	27.6 V
Rated Current	2.6 A	1.4 A	3.6 A	1.8 A	5.4 A	2.7 A
Peak 5s typ)	3.1 A	1.7 A	4.3 A	2.2 A	6.5 A	3.2 A
Output Regulation	±2 %	±2 %	±1 %	±1 %	±1 %	±1 %
Ripple & Noise (max)	120 mVp-p	200 mVp-p	120 mVp-p	200 mVp-p	120 mVp-p	200 mVp-p
Efficiency (typ)	83 %	86 %	81 %	85 %	80 %	84 %
AC Input	85–264 VAC; 120–370 VDC	85–264 VAC; 120–370 VDC	85–264 VAC; 120–370 VDC	85–264 VAC; 120–370 VDC	85–264 VAC; 120–370 VDC	85–264 VAC; 120–370 VDC
Cooling	Convection	Convection	Convection	Convection	Convection	Convection
Protections	SC/OL/OV/BP	SC/OL/OV/BP	SC/OL/OV/BP	SC/OL/OV/BP	SC/OL/OV/BP	SC/OL/OV/BP
Temp Compensation	Yes	Yes	Yes	Yes	Yes	Yes
No-load Power	<0.75 W	<0.75 W	<0.75 W	<0.75 W	<0.75 W	<0.75 W
Operating Temp	-20~+60 °C	-20~+60 °C	-20~+60 °C	-20~+60 °C	-20~+60 °C	-20~+60 °C
Dimensions (mm)	99×97×36	99×97×36	129×98×38	129×98×38	159×97×38	159×97×38
Certifications	UL/CE/EN EMC	UL/CE/EN EMC	UL/CE/EN EMC	UL/CE/EN EMC	UL/CE/EN EMC	UL/CE/EN EMC
GET QUOTE	QUOTE ME	QUOTE ME	QUOTE ME	QUOTE ME	QUOTE ME	QUOTE ME
SPEC SHEET	SPEC SHEET	SPEC SHEET	SPEC SHEET	SPEC SHEET	SPEC SHEET	SPEC SHEET

COMPATIBLE BATTERY TECHNOLOGIES

CLICK FOR RELEVENT BRANDS

AGM Battery

GEL Battery

Sealed Lead Acid



MEAN WELL - AD Series

Built-in battery charging and UPS functionality



Dual output, one compact supply —

for systems that don't need battery backup



Typical Applications

- Security systems (access control, alarm panels)
- Emergency lighting & UPS backup systems
- Security monitoring & surveillance infrastructure
- Battery charging + DC power supply in industrial control racks
- OEM equipment requiring multi-output DC power with back-up

The Mean Well AD Series offers reliable AC/DC power supplies with built-in battery charging and UPS functionality, delivering dependable DC power with seamless battery backup for critical systems. Designed with universal AC input, comprehensive protection features (short circuit, overload, over-voltage and battery low detection), and convection cooling, AD units ensure stable performance in security, access control, alarm and emergency lighting applications. Compact yet robust, these power supplies provide both main output and dedicated battery charger outputs, making them ideal for integrators and OEMs who need uninterrupted power and flexible system design backed by global safety certifications.



MEAN WELL - AD Series

Built-in battery charging and UPS functionality

Feature / Model	AD-55A	AD-55B	AD-155A	AD-155B	AD-155C
Nominal Power	~55 W	~55 W	~155 W	~155 W	~155 W
Primary Output Voltage	13.8 V	27.6 V	13.8 V	27.6 V	54 V
Primary Rated Current	3.5 A	1.8 A	~10.5 A	~5 A	~2.7 A
Secondary (Charger) Output Voltage	~13.4 V	~26.5 V	~13.3 V	~27.1 V	~53.5 V
Secondary Rated Current	~0.23 A	~0.16 A	~0.50 A	~0.50 A	~0.50 A
Total Rated Power (combined)	~51–54 W	~51–54 W	~151–156 W	~151–156 W	~151–156 W
Output Regulation	±0.5 % to ±1 %	±0.5 % to ±1 %	±0.5 % to ±1 %	±0.5 % to ±1 %	±0.5 % to ±1 %
Ripple & Noise (typ)	~100 mVp-p	~100 mVp-p	~100–150 mVp-p	~100–150 mVp-p	~240 mVp-p
AC Input	88–264 VAC; 124–370 VDC	88–264 VAC; 124–370 VDC	88–264 VAC; 124–370 VDC	88–264 VAC; 124–370 VDC	88–264 VAC; 124–370 VDC
Protections	SC / OL / OV / Battery Low	SC / OL / OV / Battery Low	SC / OL / OV / Battery Low	SC / OL / OV / Battery Low	SC / OL / OV / Battery Low
Cooling	Convection	Convection	Convection	Convection	Convection
Operating Temp	−10 °C ~ +60 °C	−10 °C ~ +60 °C	−10 °C ~ +60 °C	−10 °C ~ +60 °C	−10 °C ~ +60 °C
Dimensions (mm)	159×97×38	159×97×38	199×110×50	199×110×50	199×110×50
Certifications	UL / TUV / CE	UL / TUV / CE	UL / TUV / CE	UL / TUV / CE	UL / TUV / CE
GET QUOTE	**QUOTE ME**	**QUOTE ME**	**QUOTE ME**	**QUOTE ME**	**QUOTE ME**
SPEC SHEET	SPEC SHEET	SPEC SHEET	SPEC SHEET	SPEC SHEET	SPEC SHEET

COMPATIBLE BATTERY TECHNOLOGIES

CLICK FOR RELEVENT BRANDS

Fire Alarm System

AGM Battery

GEL Battery

Sealed Lead Acid

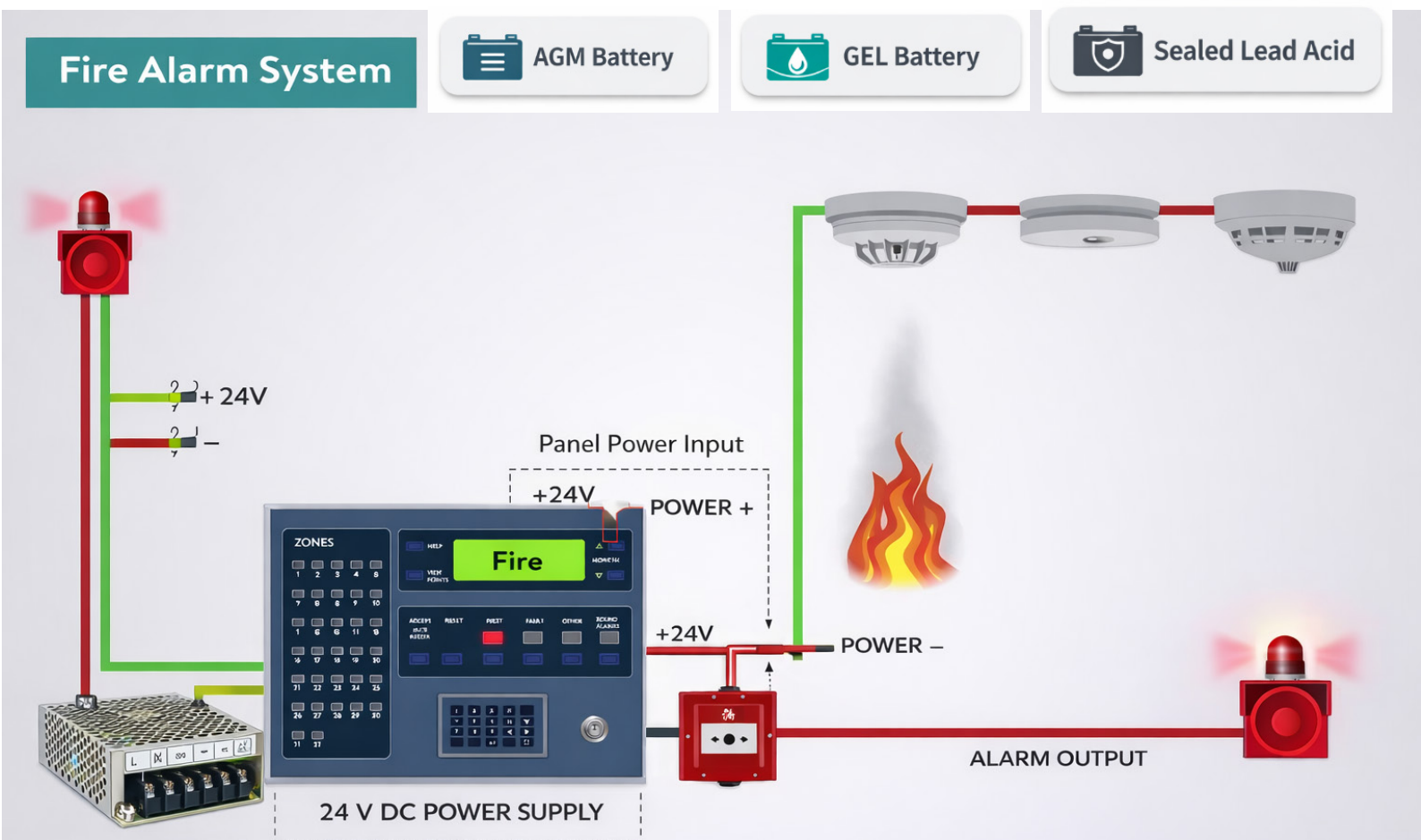

Power Your Security. Protect What Matters.

Reliable, high-performance power supplies for CCTV, Alarms & Access Control.



- ✔ *24/7 Reliable Operation*
- ✔ *Short-Circuit, Overload & Overvoltage Protection*
- ✔ *Compact & Easy Installation*
- ✔ *Wide Input Voltage Range*

Upgrade Your Security System Today — Choose MEAN WELL.

MEAN WELL - LAD Series

Built-in UPS & Battery Charger

The MEAN WELL **LAD Series delivers dependable, economical AC/DC power solutions with integrated UPS and battery charging functionality** for critical security, fire safety, and automation systems. Designed for system integrators and OEMs, the LAD family provides robust dual-output power with smart battery management, flexible status signalling, and wide-range input support — ensuring reliable operation even in mains power interruptions. With its compact low profile, broad operating temperature range, and comprehensive protection suite, the **LAD Series is optimized for installations where uptime and safety matter most, such as alarm panels, evacuation systems, and remote monitoring stations.**

Model	Power	Output Voltages (Selectable)	Rated Current (Main)	Battery Charger	Input Range	Efficiency	Protection	GET QUOTE	SPEC SHEET
LAD-120	120W	13.8 V / 27.6 V / 41.5 V / 55.2 V	7.7 A / 3.4 A / 1.9 A / 1.21 A	1 A	90–264 VAC / 127–370 VDC	up to ~88 %	SC, OL, OV, OT, BLV, BRP	**QUOTE ME**	SPEC SHEET
LAD-240	240W	13.8 V / 27.6 V / 41.5 V / 55.2 V	16.4 A / 7.7 A / 4.78 A / 3.4 A	1 A	90–264 VAC	up to ~88 %	SC, OL, OV, OT, BLV, BRP	**QUOTE ME**	SPEC SHEET
LAD-360	≈360W	27.6 V / 41.5 V / 55.2 V	11.5 A / 7.14 A / 5.03 A	1.5 A	90–264 VAC	(typical)	SC, OL, OV, OT, BLV, BRP	**QUOTE ME**	SPEC SHEET
LAD-600	≈600W	27.6 V / 41.5 V / 55.2 V	18.74 A / 11.45 A / 7.87 A	3 A	90–264 VAC	(typical)	SC, OL, OV, OT, BLV, BRP	**QUOTE ME**	SPEC SHEET

COMPATIBLE BATTERY TECHNOLOGIES

CLICK FOR RELEVENT BRANDS

AGM Battery | GEL Battery | Sealed Lead Acid



Built-in UPS for lead-acid systems —

reliable backup when the power drops

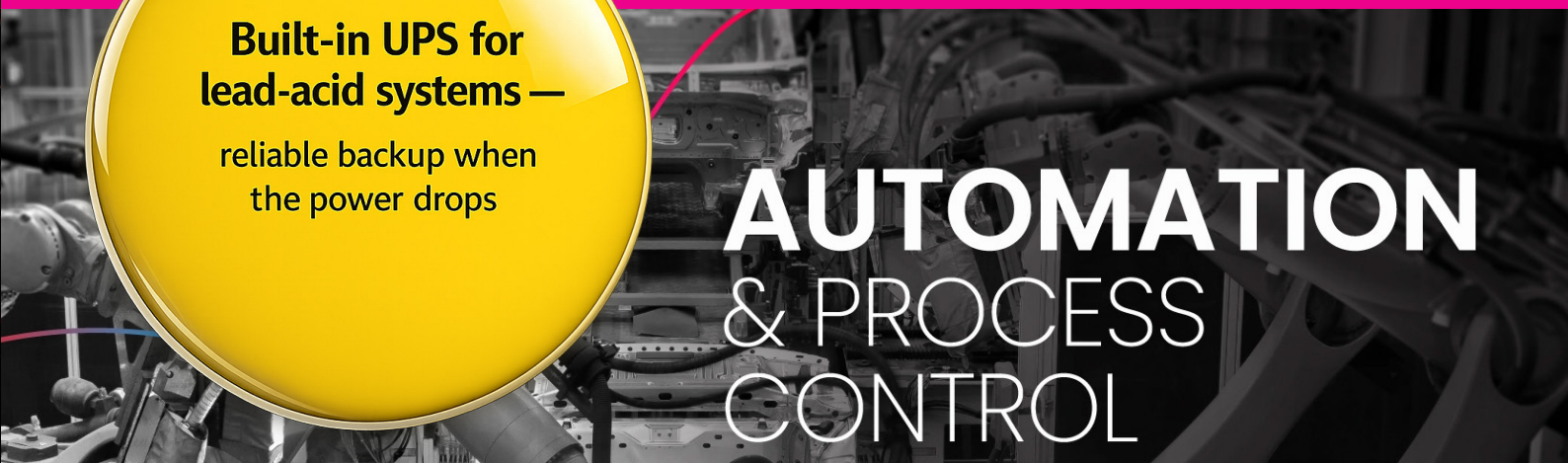

MEAN WELL - PSC Series

Compact UPS-capable AC/DC power supplies with built-in battery charging

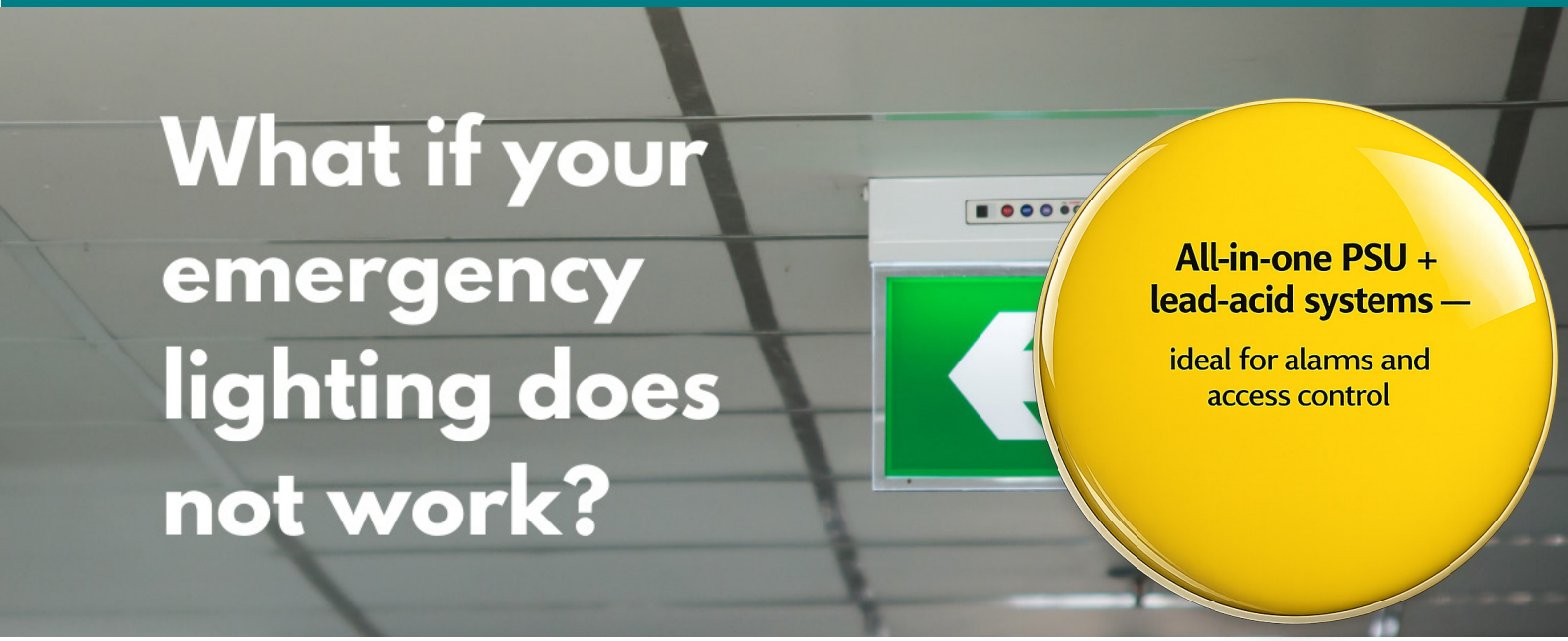

COMPATIBLE BATTERY TECHNOLOGIES CLICK FOR RELEVENT BRANDS

AGM Battery | GEL Battery | Sealed Lead Acid

Emergency lighting & UPS systems

Model	Power	Output Options	Rated Current (Main)	Input Range	Protection	Efficiency	Protection	GET QUOTE	SPEC SHEET
PSC-35 Series	35.88W	13.8 V / 27.6 V	~1.7 A / ~0.9 A (Main), ~0.85 A / ~0.45 A (Charger)	90–264 VAC, 127–370 VDC	90–264 VAC / 127–370 VDC	~84–86 %	SC/OL/OV / Battery Low / Reverse Polarity	**QUOTE ME**	SPEC SHEET
PSC-60 Series	~59.3W	13.8 V / 27.6 V	~2.8 A / ~1.4 A	90–264 VAC, 127–370 VDC	90–264 VAC	~86 %	SC/OL/OV / Battery Low / Reverse Polarity	**QUOTE ME**	SPEC SHEET
PSC-100 Series	~100W	13.8 V / 27.6 V	~7.0 A / ~3.5 A (CH1), ~2.5 A / ~1.25 A (CH2)	90–264 VAC, 127–370 VDC	90–264 VAC	~86–88 %	SC/OL/OV / Battery Low / Reverse Polarity	**QUOTE ME**	SPEC SHEET
PSC-160 Series	160W	13.8 V / 27.6 V	~11.6 A / ~5.8 A (CH1), ~4 A / ~2 A (CH2)	90–264 VAC, 127–370 VDC	90–264 VAC	~88–90 %	SC/OL/OV / Battery Low / Reverse Polarity	**QUOTE ME**	SPEC SHEET

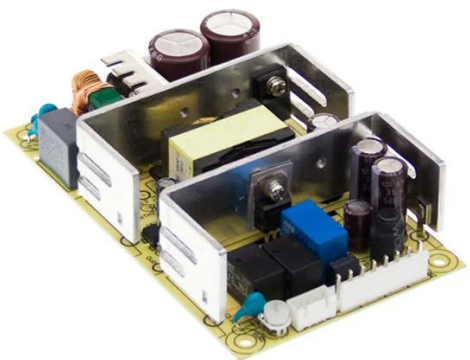





DRC-180 Series

DIN Rail Power Supplies

FEATURES

- Universal Input: 90-264VAC
- High Efficiency Up to 91.5%
- Compact Design, 32mm Wide
- DC OK LED Indicator & Relay

APPLICATIONS

- Security Systems
- Building Automation
- Control Panels
- Industrial Automation



180W Reliable DIN Rail Power Supplies

Perfect for Security Systems & Industrial Applications

MEAN WELL - DRC Series

DIN-rail mountable AC/DC buffer power supplies with built-in battery charger and UPS functionality

COMPATIBLE BATTERY TECHNOLOGIES

CLICK FOR RELEVENT BRANDS

AGM Battery | GEL Battery | Sealed Lead Acid

The MEAN WELL DRC Series is a line of **DIN-rail mountable AC/DC buffer power supplies with built-in battery charger and UPS functionality** — engineered for reliable, continuous DC power in security, automation, and backup systems. Designed to operate with **external lead-acid or VRLA batteries, the DRC Series seamlessly switches to battery backup during mains interruptions** and provides stable voltage output under a wide range of environmental conditions. These robust power supplies deliver dependable performance with comprehensive protections, universal input support, and smart status signaling, making them ideal for demanding industrial, safety, and access control applications.





Model	Power	Output Voltage	Rated Currents (Main / Charger)	Input Range	Protection	Cooling	Mounting	GET QUOTE	SPEC SHEET
DRC-40A	~40W	~13.8 V	~2.9 A / battery	90–264 VAC / 127–370 VDC	SC, OL, OV, Low Batt, Reverse Polarity	Convection	DIN-rail	**QUOTE ME**	SPEC SHEET
DRC-40B	~40W	~27.6 V	~1.0 A / battery	90–264 VAC / 127–370 VDC	SC, OL, OV, Low Batt, Reverse Polarity	Convection	DIN-rail	**QUOTE ME**	SPEC SHEET
DRC-60A	~60W	~13.8 V	higher load + charger	90–264 VAC / 127–370 VDC	SC, OL, OV, Low Batt, Reverse Polarity	Convection	DIN-rail	**QUOTE ME**	SPEC SHEET
DRC-60B	~60W	~27.6 V	–	90–264 VAC / 127–370 VDC	SC, OL, OV, Low Batt, Reverse Polarity	Convection	DIN-rail	**QUOTE ME**	SPEC SHEET
DRC-100A	~100W	~13.8 V	~4.5 A / ~2 A	90–264 VAC / 127–370 VDC	SC, OL, OV, Low Batt, Reverse Polarity	Convection	DIN-rail	**QUOTE ME**	SPEC SHEET
DRC-100B	~100W	~27.6 V	~2.25 A / ~1.25 A	90–264 VAC / 127–370 VDC	SC, OL, OV, Low Batt, Reverse Polarity	Convection	DIN-rail	**QUOTE ME**	SPEC SHEET
DRC-180A	~180W	~13.8 V	~9 A / ~4 A	90–264 VAC / 127–370 VDC	SC, OL, OV, Low Batt, Reverse Polarity	Convection	DIN-rail	**QUOTE ME**	SPEC SHEET
DRC-180B	~180W	~27.6 V	~4.5 A / ~2 A	90–264 VAC / 127–370 VDC	SC, OL, OV, Low Batt, Reverse Polarity	Convection	DIN-rail	**QUOTE ME**	SPEC SHEET



MEAN WELL - DRS Series

DIN-rail mountable AC/DC buffer power supplies with built-in battery charger and UPS functionality

COMPATIBLE BATTERY TECHNOLOGIES

CLICK FOR RELEVENT BRANDS

AGM Battery | GEL Battery | Sealed Lead Acid | VRLA Battery

PROGRAMMABLE

Lithium Ion Battery





The **DRS-240-24 and DRS-480-24** (plus other voltage variants) belong to MEAN WELL's DRS Series — intelligent DIN-rail AC/DC power supplies with built-in battery charger, D**C-UPS functionality, alarm signalling, and communications in a compact package.**

They are engineered for security, fire, automation, and critical backup systems where uptime, monitoring, and compliance matter.

Parameter	DRS-240 Series	DRS-480 Series
Total Output Power	240W	480W (peak ~550 W ≤5 s) (MEAN WELL)
Input Voltage Range	90 – 305 VAC / 127 – 431 VDC (Mean Well)	90 – 305 VAC / 127 – 431 VDC (MEAN WELL)
Operating Temp	-30 °C to +70 °C (MEAN WELL)	-30 °C to +70 °C (MEAN WELL)
Cooling	Convection (fan-less) (MEAN WELL)	Convection (fan-less) (MEAN WELL)
Protections	SC / OL / OV / OTP / Battery cut-off / Re-verse polarity (MEAN WELL)	SC / OL / OV / OTP / Battery cut-off / Re-verse polarity (MEAN WELL)
Output Voltages Available	12 V / 24 V / 36 V / 48 V (MEAN WELL)	24 V / 36 V / 48 V (MEAN WELL)
Rated Current (Example)	15.4 A (12 V)	15.4 A (24 V) (Mean Well)
	7.7 A (24 V)	13.3 A (36 V) (Mean Well)
	5.1 A (36 V)	10 A (48 V) (Mean Well)
	3.85 A (48 V)	— (Mean Well)
Recommended Battery AH Range	10 – 200 Ah (varies by voltage) (Mean Well)	10 – 200 Ah (varies by voltage) (Mean Well)
Ripple & Noise (typ.)	up to ~480 mVp-p (Mean Well)	up to ~480 mVp-p (Mean Well)
Dimensions	~85.5 × 125.2 × 129.2 mm (Planet)	~110 × 125.2 × 150.7 mm (MEAN WELL)
Alarm Signals	AC Fail, Battery Low, Charger Fail, DC-OK (MEAN WELL)	AC Fail, Battery Low, Charger Fail, DC-OK (MEAN WELL)
Communications	Modbus built-in, CANbus optional (MEAN WELL)	Modbus built-in, CANbus optional (MEAN WELL)
GET QUOTE	**QUOTE ME**	**QUOTE ME**
SPEC SHEET	SPEC SHEET	SPEC SHEET



Future-ready UPS —
supports lead-acid and programmable lithium charging

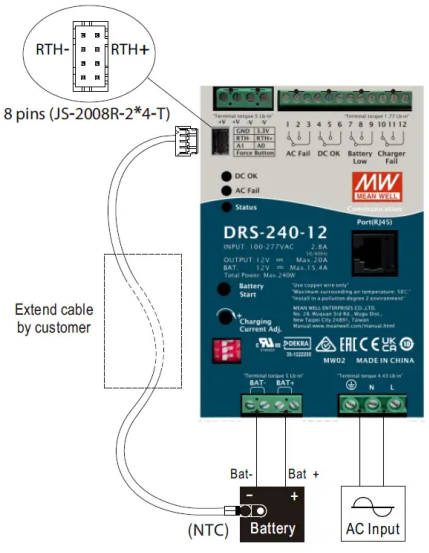

RELIABLE HIGH-POWER DC POWER SUPPLY

LRS-1200



Typical Applications

The **LRS-1200** Series is ideal for high-power DC **applications such as:**

- **Industrial automation and controls**
- **Communication systems and network infrastructure**
- **High-power LED lighting and signage**
- **Machinery and embedded systems**
- **Backup or auxiliary DC power systems**
- **Powering high-load electronics and motor drives**

MEAN WELL - LRS-1200

LRS-1200 delivers reliable power for both OEM systems and end-user installations

COMPATIBLE BATTERY TECHNOLOGIES

CLICK FOR RELEVENT BRANDS

AGM Battery | GEL Battery | Sealed Lead Acid | VRLA Battery | Lithium Ion Battery



The MEAN WELL LRS-1200 Series is a compact, high-efficiency 1200W enclosed AC/DC power supply **designed for demanding industrial, automation, communication**, LED lighting, and general DC power applications. With a low-profile 41 mm design, wide universal AC input, and robust protections, the LRS-1200 delivers reliable power for both OEM systems and end-user installations. It supports 150% peak power capability, handles wide temperature extremes, and is certified against multiple global safety standards — offering an **excellent price-to-performance ratio in a compact package.**

Model	Output Voltage	Rated Power	Output Current	Peak Power (5 s)	Input Voltage	Efficiency	Ripple & Noise (max)	GET QUOTE	SPEC SHEET
LRS-1200-12	12V	1104W	92A	~1656W	180–305 VAC	~91%	200 mVp-p	**QUOTE ME**	SPEC SHEET
LRS-1200-24	24V	1200W	50A	~1800W	180–305 VAC	~93%	240 mVp-p	**QUOTE ME**	SPEC SHEET
LRS-1200-36	36V	1198.8W	33.3A	~1800W	180–305 VAC	~94%	360 mVp-p	**QUOTE ME**	SPEC SHEET
LRS-1200-48	48V	1200W	25A	~1800W	180–305 VAC	~94%	360 mVp-p	**QUOTE ME**	SPEC SHEET



